THESE DRAWINGS ARE THE PROPERTY OF QUALTEK ELECTRONICS AND NOT TO BE REPRODUCED FOR OR COMMUNICATED TO A THIRD PARTY WITHOUT THE EXPRESS WRITTEN PERMISSION OF AN OFFICER OF QUALTEK ELECTRONICS.

REVISION			
REV.	DESCRIPTION	DATE	APPROVED

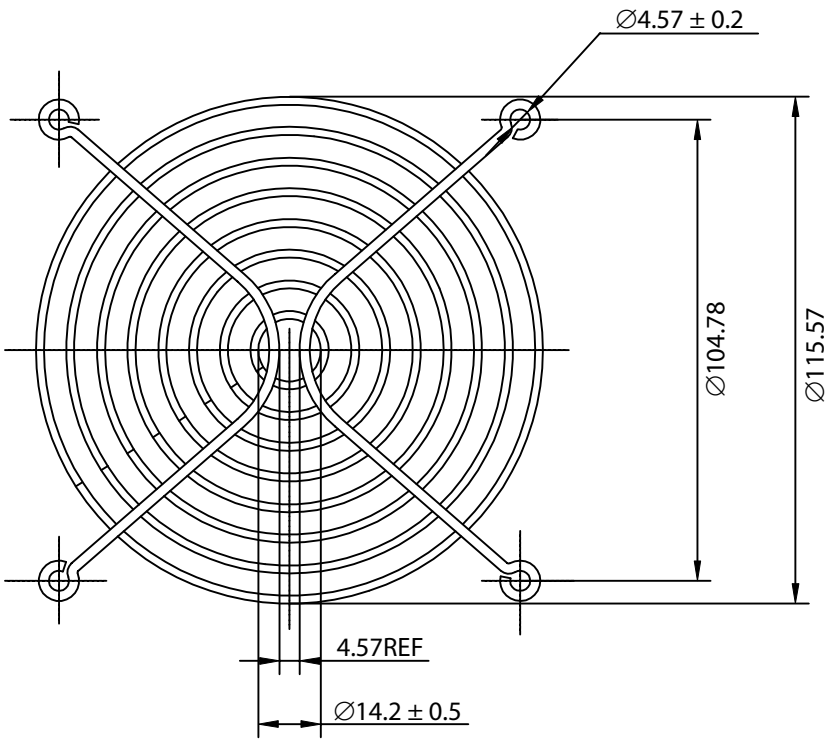

NOTES:

1. MATERIAL: STAINLESS STEEL WIRE
2. FINISH: ELECTROLYZE
3. 0.35 ± 0.05 DEPTH OF SERRATIONS ON WIRE
4. RING: ∅1.8 ± 0.1mm
   RIB: ∅2.3 ± 0.1mm
5. GENERAL TOLERANCE UNLESS NOTED IS ± 0.5mm
6. RoHS COMPLIANT

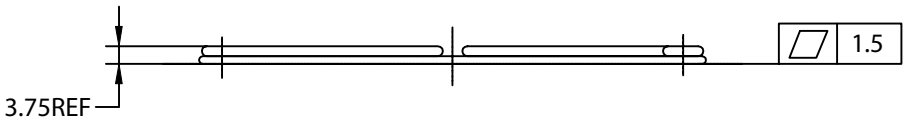

CONTROLLED

Dim range (mm)	Tolerance +/- (mm)
0-5	0.1
5-16	0.15
16-64	0.2
64-250	0.4
250-1000	0.5
1000-1500	1.0

Qualtek Electronics Corp.
FAN-S DIVISION

Part Number: 08129-SS

RoHS Compliant

Description: WIRE FORM FAN GUARD (120mm)

UNIT: mm

Drawn / Date	Checked / Date	Approved / Date
R.Nuti 10-21-08	10-21-08	LY / 10-21-08