THESE DRAWINGS ARE THE PROPERTY OF QUALTEK ELECTRONICS AND NOT TO BE REPRODUCED FOR OR COMMUNICATED TO A THIRD PARTY WITHOUT THE EXPRESS WRITTEN PERMISSION OF AN OFFICER OF QUALTEK ELECTRONICS.

REVISION			
REV.	DESCRIPTION	DATE	APPROVED

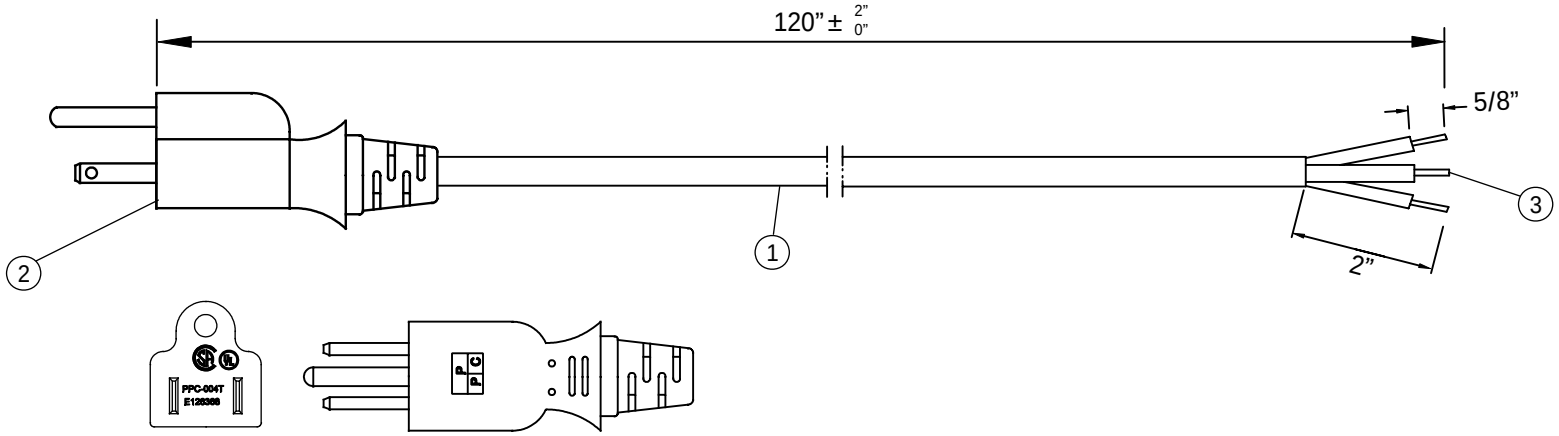

CONTROLLED

NOTES:

1. CORDAGE: SVT, 18AWG / 3C, UNSHIELDED, NA COLOR CODE, TEMP. RATING: 105°C, RATING: 125V 10A, JACKET COLOR: BLACK
2. PLUG: NEMA 5-15P
3. OTHER END: ROJ 2", STRIP 5/8"
4. APPROVALS: UL, CSA
5. ROHS COMPLIANT

Dim range (mm)	Tolerance +/- (mm)
0-1	0.15
1-6	0.20
6-18	0.30
18-50	0.50
50-120	0.70
120-250	0.90
250-500	1.20

Qualtek Electronics Corp.
PPC DIVISION

Part Number: 411004-01 RoHS Compliant

Description: POWER CORD

UNIT: in

Drawn / Date	Checked / Date	Approved / Date
R. Nuti 09-10-20	09-10-20	LY / 09-10-20